Current part is item (13) on diagram. Available at www.oshkoshequipment.com

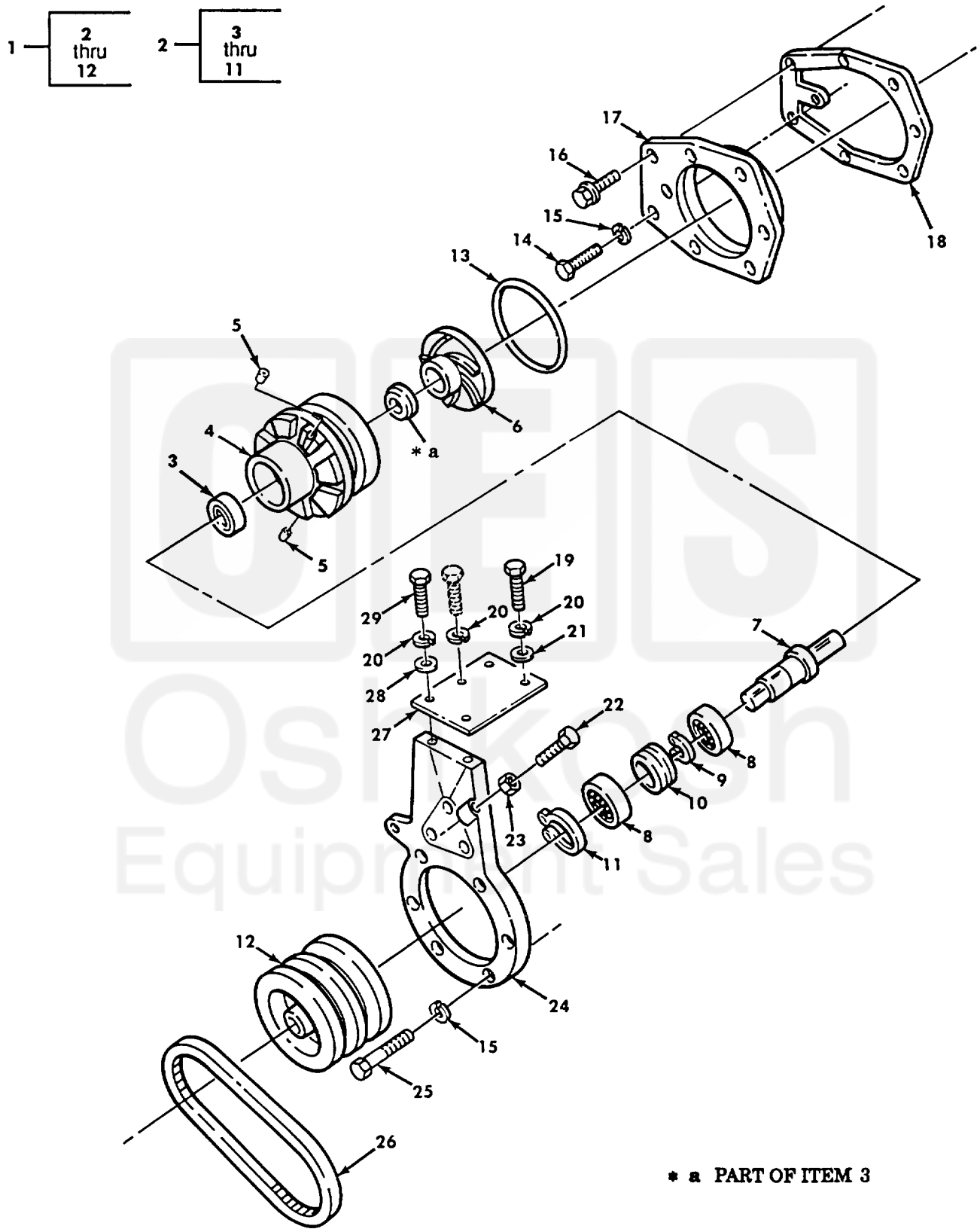

Figure 118. Water Pump Assembly, Seals, and Mounting Hardware (M939, M939A).

Current part is item (13) on diagram. Available at www.oshkoshequipment.com

Current part is item (13) on diagram. Available at www.oshkoshequipment.com

(1) ITEM NO	(2) SMR CODE	(3) NSN	(4) CAGEC	(5) PART NUMBER	(6) DESCRIPTION AND USABLE ON CODES (UOC)	(7) QTY
					DAJ,DAK,DAL,DAW,DAX,V12,V13,V14,V15, V16,V17,V18,V19,V20,V21,V22,V24,V25, V39	
11	PAFZZ	2815008150355	15434	S-16255	..RING,BEARING RETAIN ..... UOC:DAA,DAB,DAC,DAD,DAE,DAF,DAG,DAH, DAJ,DAK,DAL,DAW,DAX,V12,V13,V14,V15, V16,V17,V18,V19,V20,V21,V22,V24,V25, V39	1
12	PAFZZ	3020009290713	15434	154966	.PULLEY,GROOVE .WATER PUMP ..... UOC:DAA,DAB,DAC,DAD,DAE,DAF,DAG,DAH, DAJ,DAK,DAL,DAW,DAX,V12,V13,V14,V15, V16,V17,V18,V19,V20,V21,V22,V24,V25, V39	1
13	PAFZZ	5330001066369	15434	130240	GASKET PART OF KIT P/N 3011472 ..... UOC:DAA,DAB,DAC,DAD,DAE,DAF,DAG,DAH, DAJ,DAK,DAL,DAW,DAX,V12,V13,V14 ,V15, V16,V17,V18,V19,V20,V21,V22,V24,V25, V39,	1
14	PAFZZ	5305012101608	15434	106549	SCREW,CAP,HEXAGON H ..... UOC:DAA,DAB,DAC,DAD,DAE,DAF,DAG,DAH, DAJ,DAK,DAL,DAW,DAX,V12,V13,V14,V15, V16,V17,V18,V19,V20,V21,V22,V24,V25, V39	1
15	PAFZZ	5310002617340	15434	S-604	WASHER,LOCK ..... UOC:DAA,DAB,DAC,DAD,DAE,DAF,DAG,DAH, DAJ,DAK,DAL,DAW,DAX,V12,V13,V14,V15, V16,V17,V18,V19,V20,V21,V22,V24,V25, V39	1
16	PAFZZ	5305011306100	5434	3010594	SCREW,CAP,HEXAGON H ..... UOC:DAA,DAB,DAC,DAD,DAE,DAF,DAG,DAH, DAJ,DAK,DAL,DAW,DAX,V12,V13,V14,V15, V16,V17,V18,V19,V20,V21,V22,V24,V25, V39	1
17	PBFZZ	2930004089404	15434	130227	SUPPORT,PUMP,WATER..... UOC:DAA,DAB,DAC,DAD, DAE,DAF,DAG,DAH, DAJ,DAK,DAL,DAW,DAX,V12,V13,V14,V15, V16,V17,V18,V19,V20,V21,V22,V24,V25, V39	1
18	PAFZZ	5330001066370	15434	130226	GASKET WATER PUMP SUPPORT PART OF ..... KIT P/N 3011472 ..... UOC: DAA,DAB,DAC,DAD,DAE,DAF,DAG,DAH, DAJ,DAK,DAL,DAW,DAX,V12,V13,V14,V15, V16,V17,V18,V19,V20,V21,V22,V24,V25, V39	1
19	PAFZZ	5305007959343	15434	S-176	SCREW,CAP,HEXAGON H ..... UOC:DAA,DAB,DAC,DAD,DAE,DAF,DAG,DAH, DAJ,DAK,DAL,DAW,DAX,V12,V13,V14,V15, V16,V17,V18,V19,V20,V21,V22,V24,V25, V39	2
20	PAFZZ	5310000034094	01276	210104-8S	WASHER,LOCK ..... UOC:DAA,DAB,DAC,DAD,DAE,DAF,DAG,DAH, DAJ,DAK,DAL,DAW,DAX,V12,V13,V14,V15,	7

Current part is item (13) on diagram. Available at www.oshkoshequipment.com